Smart Energy Center

DESIGN AWARD 2017

reddot award 2016 winner

Higher Revenue

- High efficiency inverter topology, Max. Efficiency 98.6%, European Efficiency 98.0%

Simple & Easy

- 10.4kg, allows one person simple installation
- Optimized AC connector for quick wiring
- Supports one-click inverter configuration
- Supports one-click remote I-V curve diagnosis

Battery Ready

- Integrated energy storage interface

Safe & Reliable

- IP65, Natural cooling
- Build-in DC and AC surge arresters

Efficiency Curve

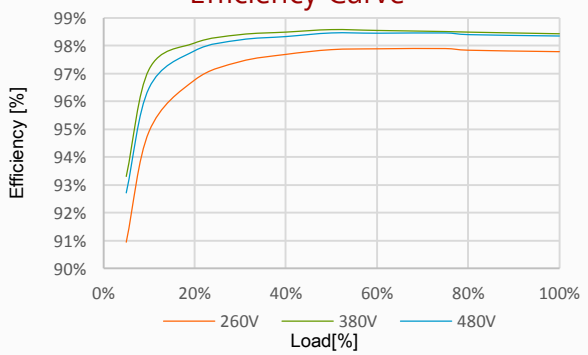

Circuit Diagram

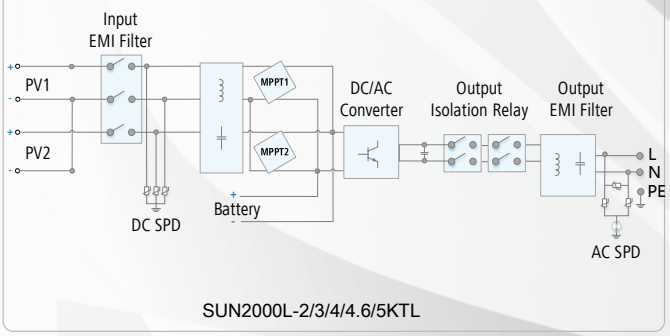

SUN2000L-2/3/4/4.6/5KTL

SUN2000L-2/3/4/4.6/5KTL

Technical Specification	SUN2000L-2KTL	SUN2000L-3KTL	SUN2000L-4KTL	SUN2000L-4.6KTL	SUN2000L-5KTL
Efficiency					
Max. efficiency	98.4%	98.5 %	98.6 %	98.6 %	98.6 %
European weighted efficiency	97.0 %	97.6 %	97.9 %	98 %	98 %
Input					
Recommended max. PV power	2660 Wp	3990 Wp	5400 Wp	6210 Wp	6750 Wp
Max. input voltage	600 V				
Operating voltage range [1]	90 V~ 600 V				
Start-up voltage	120 V				
Full power MPPT voltage range	120V~480 V	160 V~480 V	210 V~480 V	260 V~480 V	260 V~480 V
Rated input voltage	380 V				
Max. input current per MPPT	11 A				
Number of MPP trackers	2				
Max. number of inputs per MPPT	1				
Output (Single Phase)					
Rated output power	2000 W	3000 W	4000 W	4600 W	5000 W
Maximum apparent power	2200 VA	3300 VA	4400 VA	4600 VA	5500 VA
Rated output voltage	220 V / 230 V / 240 V				
Rated AC grid frequency	50 Hz / 60 Hz				
Maximum output current	10 A	15 A	20 A	23 A	25 A
Adjustable power factor	0.8 leading ... 0.8 lagging				
Max. total harmonic distortion	≤ 3 %				
Protection					
Anti-Islanding protection	Yes				
DC reverse polarity protection	Yes				
Insulation monitoring	Yes				
DC surge arrester	Yes				
AC surge arrester	Yes				
Residual current monitoring	Yes				
AC overcurrent protection	Yes				
AC short-circuit protection	Yes				
AC over-voltage protection	Yes				
Over-heat protection	Yes				
General Data					
Operating temperature range	-30 ~ +60 °C (Derating above 45°C @ Rated output power)				
Relative operating humidity	0 %RH～100 %RH				
Operating altitude	0-4000 m (Derating above 2000m)				
Cooling	Natural Convection				
Display	LED Indicators				
Communication	RS485, WLAN				
Weight (incl. mounting bracket)	10.4 kg				
Dimension (incl. mounting bracket)	375X375X161.5 mm				
Degree of protection	IP65				
Battery Compatibility					
Battery	LG Chem RESU 7H / 10H				
Voltage range	350~450 Vdc				
Max. current	10 A				
Communication	RS485				
Standards Compliance					
Safety	EN/IEC 62109-1, EN/IEC 62109-2				
Grid connection standards	G83/2,G59/3, EN 50438, CEI 0-21, VDE-AR-N-4105, UTE C 15-712-1, AS 4777				

*1.The maximum input voltage and operating voltage upper limit will be reduced to 500 V when inverter connects and works with battery.
*2.Only applicable for PV string.

The text and figures reflect the current technical state at the time of printing. Subject to technical changes. Errors and omissions excepted. Huawei assumes no liability for mistakes or printing errors. For more information, please visit solar.huawei.com. Version No.:01-(20170728)

SUN2000 Series
Solar Inverter for Grid-Connection

Three-Phase, Transformerless, 8kW/10kW/12kW/15kW/17kW/20kW/23kW

Introduction

Huawei Technologies, adhering to the concept of “high quality, perfect service, and quick response to customer’s demand", constantly brings high quality products and services to the world. As the world's top 500 enterprises, we are actively promoting the use of clean solar energy by providing a full range of solar inverters and intelligent monitoring solutions.

In more than 20 years, Huawei has provided communication equipments and stable power supplies for one-third of global population’s communication service, and has accumulated rich experience of R & D and application in the ICT and network energy field. Based on leading technology platforms of power supplies and digital control, we release the SUN2000 series three-phase inverter with telecom class reliability and top efficiency all over the world.

This series of products meets Germany BDEW MV directive and VDE AR N 4105 LV directive, CE Low Voltage Directive and the Directive for Electromagnetic Compatibility, Italy Enel-GUIDA and CEI 0-21 certification, as well as China Golden Sun certification. It has good environment adaptability and can be used for various scenarios covering from 8kW to Megawatts, either rooftop or ground mounted power plants.

HUAWEI TECHNOLOGIES CO., LTD.

HUAWEI

Copyright © Huawei Technologies Co., Ltd. 2014. All rights reserved.

General Disclaimer

The information in this document may contain predictive statements including, without limitation, statements regarding the future financial and operating results, future product portfolio, new technology, etc. There are a number of factors that could cause actual results and developments to differ materially from those expressed or implied in the predictive statements. Therefore, such information is provided for reference purpose only and constitutes neither an offer nor an acceptance. Huawei may change the information at any time without notice.

HUAWEI TECHNOLOGIES Duesseldorf GmbH
Südwestpark 60 4.0G, 90449 Nürnberg, Germany
Tel: 49 911 255 22 3053
Fax: 49 911 255 22 3090
info.energyeu@huawei.com

HUAWEI TECHNOLOGIES CO., LTD.
Huawei Industrial Base
Bantian Longgang
Shenzhen 518129, P.R. China
Tel: +86-755-28780808
Version No.: M3-022334-20140125-C-5.0

www.huawei.com

Key Features

Higher Yields

- SUN2000-20KTL Photon test result: A+/A+ at medium and high irradiation
- Maximum efficiency 98.6%
- European efficiency 98.3%

High Reliability

- With 20 years technology accumulation in telecom power, the same platform building inverter product
- No need of external fan with natural cooling technology
- Type II DC and Type III AC surge protection devices integrated
- Warranty up to 25 years

Smart

- Maximum of 3 MPPT for versatile adaption to different module types or quantities built up with different alignments
- Up to 6 strings intelligent monitoring and fault detection
- Local graphic LCD and remote monitoring
- RS 485 and USB ports for connectivity and data management

Friendly

- 48kg@23KW, compact design of 0.08m^3
- Easy connection with external waterproof DC / AC and signal terminals
- Noise ≤ 29dB
- Outdoor application of IP65

Efficiency Curve

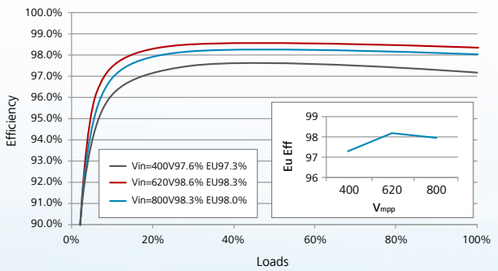

Circuit Diagram

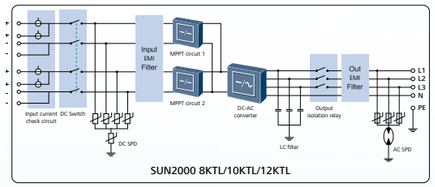

SUN2000 8KTL/10KTL/12KTL

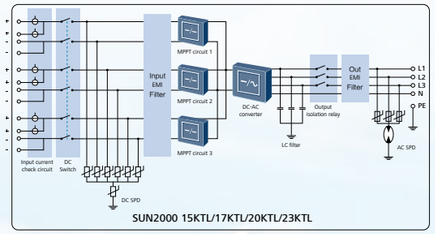

SUN2000 15KTL/17KTL/20KTL/23KTL

Technical Specifications

Technical Specifications	SUN2000-8KTL	SUN2000-10KTL	SUN2000-12KTL	SUN2000-15KTL	SUN2000-17KTL	SUN2000-20KTL	SUN2000-23KTL
Efficiency							
Max. efficiency	98.5%	98.5%	98.5%	98.6%	98.6%	98.6%	98.6%
European efficiency	98%	98%	98%	98.3%	98.3%	98.3%	98.3%
Input							
Max. DC input (cosφ=1)	9,100 W	11,400 W	13,700 W	17,100 W	19,200 W	22,500 W	23,600 W
Max. input voltage	1000 V	1000 V	1000 V	1000 V	1000 V	1000 V	1000 V
Max. input current per MPPT	18 A	18 A	18 A	18 A	18 A	18 A	18 A
Min. operating voltage	200 V	200 V	200 V	200 V	200 V	200 V	200 V
MPP voltage range	320 V~800 V	320 V~800 V	380 V~800 V	400 V~800 V	400 V~800 V	480 V~800 V	480 V~800 V
Rated input voltage	620 V	620 V	620 V	620 V	620 V	620 V	620 V
Max. number of inputs	4	4	4	6	6	6	6
Number of MPP trackers	2	2	2	3	3	3	3
Output							
AC output power (cosφ=1)	8,800 W	11,000 W	13,200 W	16,500 W	18,700 W	22,000 W	23,000 W
Rated output voltage	3×230V/400V+N+PE 3×220V/380V+N+PE	3×230V/400V+N+PE 3×220V/380V+N+PE	3×230V/400V+N+PE 3×220V/380V+N+PE	3×230V/400V+N+PE 3×220V/380V+N+PE	3×230V/400V+N+PE 3×220V/380V+N+PE	3×230V/400V+N+PE 3×220V/380V+N+PE	3×230V/400V+N+PE 3×220V/380V+N+PE
AC power frequency	50 Hz/60 Hz	50 Hz/60 Hz	50 Hz/60 Hz	50 Hz/60 Hz	50 Hz/60 Hz	50 Hz/60 Hz	50 Hz/60 Hz
Max. output current	12.8 A	16 A	19.2 A	24 A	27.2 A	32 A	33.5 A
Adjustable power factor	0.8 leading ... 0.8 lagging	0.8 leading ... 0.8 lagging	0.8 leading ... 0.8 lagging	0.8 leading ... 0.8 lagging	0.8 leading ... 0.8 lagging	0.8 leading ... 0.8 lagging	0.8 leading ... 0.8 lagging
Max. total harmonic distortion	<3%	<3%	<3%	<3%	<3%	<3%	<3%
Protection							
Input-side disconnection device	Yes	Yes	Yes	Yes	Yes	Yes	Yes
Anti-Islanding protection	Yes	Yes	Yes	Yes	Yes	Yes	Yes
AC over current protection	Yes	Yes	Yes	Yes	Yes	Yes	Yes
DC reverse-polarity protection	Yes	Yes	Yes	Yes	Yes	Yes	Yes
PV array string fault monitoring	Yes	Yes	Yes	Yes	Yes	Yes	Yes
DC surge arresters	Type II	Type II	Type II	Type II	Type II	Type II	Type II
AC surge arresters	Type III	Type III	Type III	Type III	Type III	Type III	Type III
Insulation monitoring	Yes	Yes	Yes	Yes	Yes	Yes	Yes
Residual current detection	Yes	Yes	Yes	Yes	Yes	Yes	Yes
Display and Communication							
Display	Graphic LCD	Graphic LCD	Graphic LCD	Graphic LCD	Graphic LCD	Graphic LCD	Graphic LCD
RS485	Yes	Yes	Yes	Yes	Yes	Yes	Yes
USB	Yes	Yes	Yes	Yes	Yes	Yes	Yes
General Data							
Dimensions(W/H/D)	520x610x255 mm (20.5 x 24.0 x 10.0 in.)	520x610x255 mm (20.5 x 24.0 x 10.0 in.)	520x610x255 mm (20.5 x 24.0 x 10.0 in.)	520x610x255 mm (20.5 x 24.0 x 10.0 in.)	520x610x255 mm (20.5 x 24.0 x 10.0 in.)	520x610x255 mm (20.5 x 24.0 x 10.0 in.)	520x610x255 mm (20.5 x 24.0 x 10.0 in.)
Weight	40 kg	40 kg	40 kg	48 kg	48 kg	48 kg	48 kg
Operating temperature range	-25 °C to +60 °C (-13 °F to +140 °F)	-25 °C to +60 °C (-13 °F to +140 °F)	-25 °C to +60 °C (-13 °F to +140 °F)	-25 °C to +60 °C (-13 °F to +140 °F)	-25 °C to +60 °C (-13 °F to +140 °F)	-25 °C to +60 °C (-13 °F to +140 °F)	-25 °C to +60 °C (-13 °F to +140 °F)
Cooling	Natural convection	Natural convection	Natural convection	Natural convection	Natural convection	Natural convection	Natural convection
Operating altitude	3000 m	3000 m	3000 m	3000 m	3000 m	3000 m	3000 m
Relative humidity (non-condensing)	0~100%	0~100%	0~100%	0~100%	0~100%	0~100%	0~100%
DC connector	Amphenol H4	Amphenol H4	Amphenol H4	Amphenol H4	Amphenol H4	Amphenol H4	Amphenol H4
AC connector	Amphenol C16/3	Amphenol C16/3	Amphenol C16/3	Amphenol C16/3	Amphenol C16/3	Amphenol C16/3	Amphenol C16/3
Degree of protection	IP65	IP65	IP65	IP65	IP65	IP65	IP65
Self-consumption at night	< 1 W	< 1 W	< 1 W	< 1 W	< 1 W	< 1 W	< 1 W
Topology	Transformerless	Transformerless	Transformerless	Transformerless	Transformerless	Transformerless	Transformerless
Noise emission	29dB	29dB	29dB	29dB	29dB	29dB	29dB
Warranty	5 years 10/15/20/25 years optional	5 years 10/15/20/25 years optional	5 years 10/15/20/25 years optional	5 years 10/15/20/25 years optional	5 years 10/15/20/25 years optional	5 years 10/15/20/25 years optional	5 years 10/15/20/25 years optional